# KOHLER® SERVICE PARTS

## NIEDECKEN™ BATH AND SHOWER MIXER VALVE

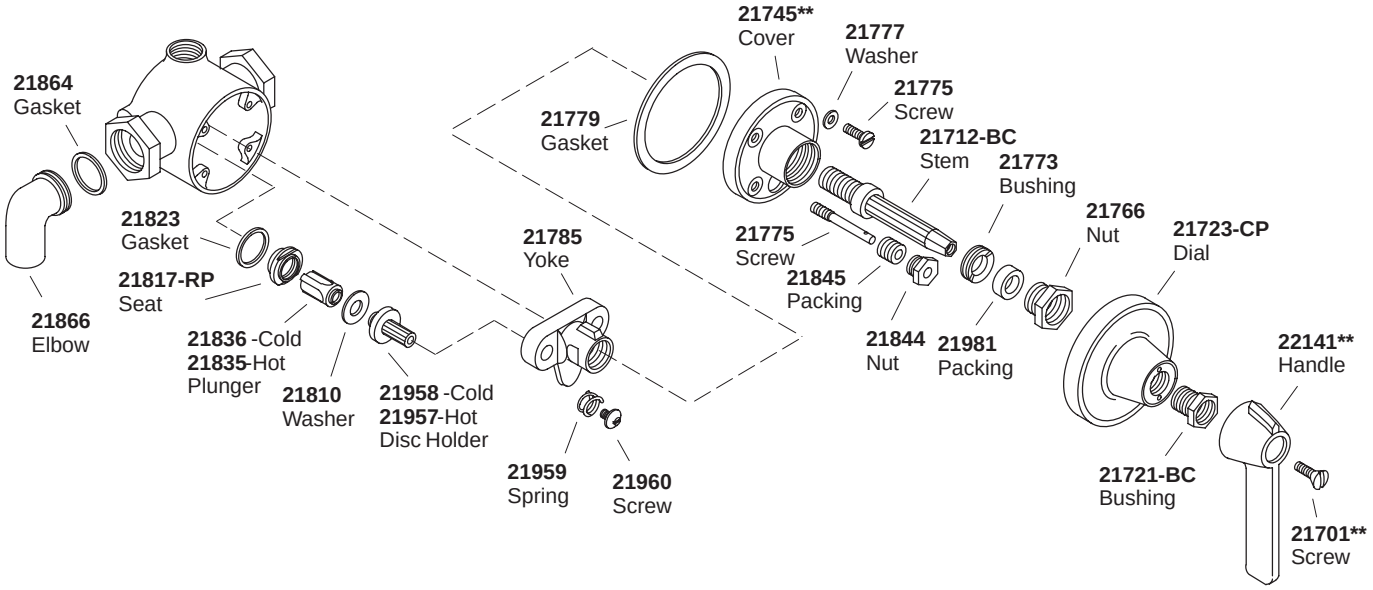


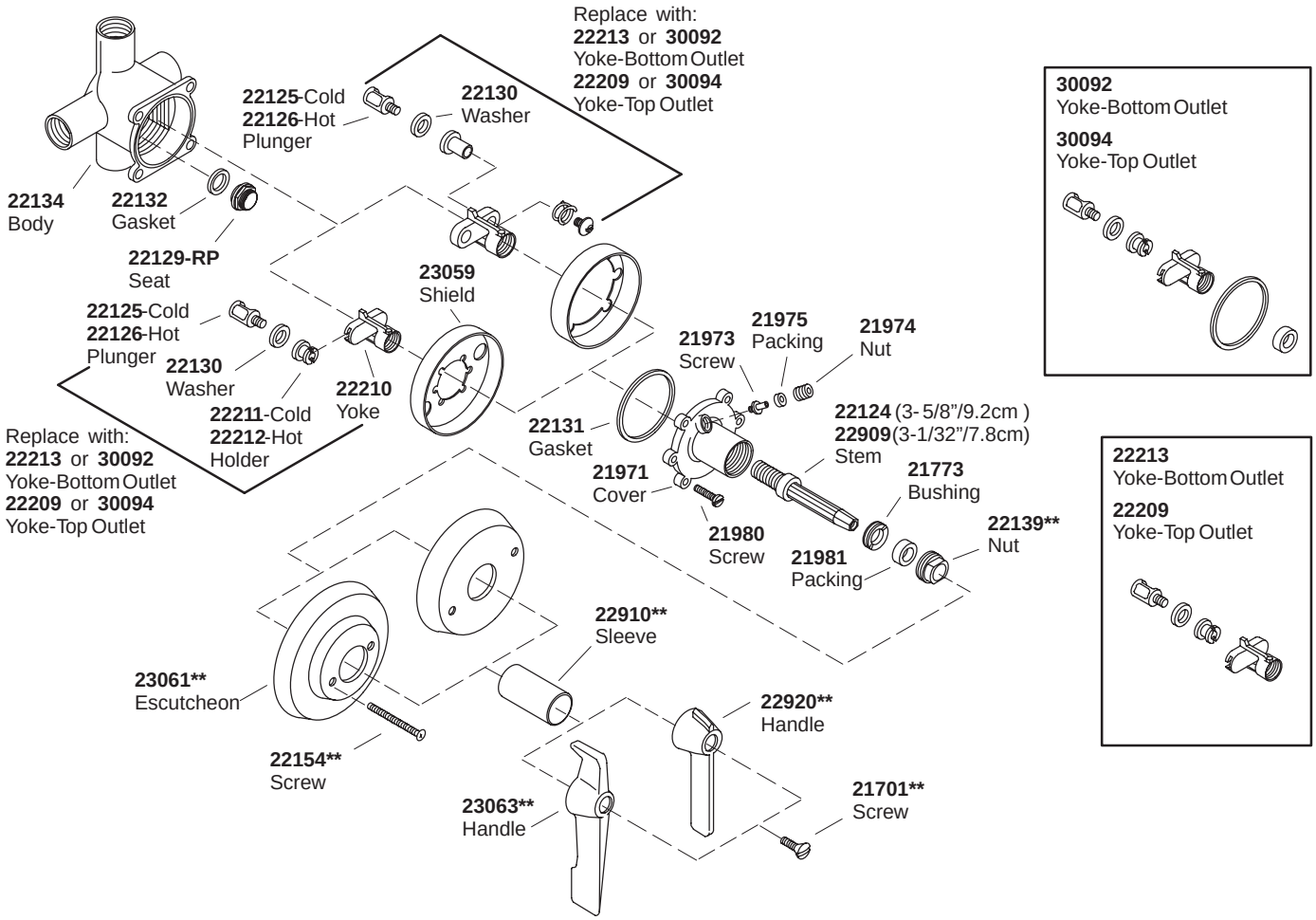


****Finish/color code must be specified when ordering.**